ISSN: **3139-5503** | Volume-1 Issue-2 | May-June 2026 | **ADSJ-1206**
DOI: https://doi.org/10.5281/zenodo.22301461

DESIGN AND ANALYSIS OF AUTOMOTIVE MUFFLER

DR. CH. SRINIVAS, *Professor in Mechanical & Principal*,
VAAGESWARI COLLEGE OF ENGINEERING(AUTONOMOUS), KARIMNAGAR

ABSTRACT: Noise pollution is a major issue in today's culture, thus soundproofing is an absolute must if you want to minimize the level of noise. The muffler is an important component of the vehicle's exhaust system because it reduces the noise produced by the combustion products as they pass through the system. Maintaining a minimum pressure drop while limiting noise is a difficult task. A new muffler is created and built using software that takes into account a range of elements. The standard exhaust fitted on the Maruti-Suzuki WagonR is first considered, and then the replacement muffler is examined using numerical codes. It is simple to develop the ideal configuration that reduces back pressure, pressure drop, and noise by adjusting the design parameters in light of the study. The noise blocking performance, pressure lowering, and lifespan of the recommended built muffler can be compared to those of a standard muffler. The intensity of the noise was measured with a Sound Level Meter (SLM), and the pressure drop was monitored with a water manometer tube.

Keywords—Pressure Drop; Back Pressure; Noise Reduction; Water Tube Manometer; Sound Level Meter(SLM)

1. INTRODUCTION

Vehicle traffic is a major cause of environmental noise pollution. The mechanical resonator's job is to reduce noise pollution created by an internal combustion engine's exhaust system. There are also air droplets visible within the muffler. In the exhaust system, a final component comes before the catalytic converter. The muffler is the technical term for it. A car muffler's principal function is to reduce engine noise. Eliminating noise with a muffler is a requirement that a vehicle without one demonstrates its owners are aware of. Without mufflers on cars, the environment would be flooded with harmful exhaust pollutants. Sound is an example of a pressure wave created by air fluctuating between high and low pressure levels. Pressure waves are formed within the engine when an exhaust valve alternates between opening and closing. As a result, high-pressure gas is introduced into the exhaust system. The previously described pressure surges are connected with noise. Because of pressure changes that occur during faster engine rotation, a higher frequency of sound waves is emitted. The term noise is commonly defined as any unpleasant or unappealing sound. An automotive exhaust pipe obstructs the direction of sound waves while allowing exhaust gasses to escape. Back-pressure in fluids refers to the pressure difference between the interior and external. This phenomenon is caused by a drop in stagnation pressure and fast area fluctuations across multiple perforated portions. As back pressure rises, so does thermal efficiency and the amount of available net power. Lumbar pressure and the engine have a clear relationship.

The program is currently being discussed.

ISSN: **3139-5503** | Volume-1 Issue-2 | May-June 2026 | **ADSJ-1206**
DOI: https://doi.org/10.5281/zenodo.22301461

As back pressure grows, the engine produces less net power, but it functions more efficiently as back pressure lowers.

Mufflers are classified into two main types: 1. The topic of discussion is Reactive Muffler 2. In addition to the features already discussed, one form of muffler has reactive and absorptive properties. Hybrid mufflers, which perform both reactive and absorptive functions, are now a common component of exhaust systems. **Reactive muffler**

Rigid or reflecting mufflers work by decreasing noise by destructive interference. This leads me to conclude that the aim of silencer design is to eliminate a portion of the sound waves produced by engines. In order for optimal destructive interference to occur, a mirrored pressure wave with the same amplitude and a 180-degree inversion must meet with the transmitted pressure wave. When the shape of the region changes or stops to be continuous, reflections become visible. Reactive mufflers are typically made up of numerous cylinders that expand and resonate to reduce sound pressure levels at specified frequencies. The asymmetrical design of the inlet and exit tubes, which feature perforations that allow sound waves to flow in opposite directions within a chamber, often causes destructive interference. Reactive mufflers are used in the exhaust systems of many automobiles, especially when noise levels fluctuate over time due to differences in the flow of exhaust gasses. The exhaust system contains a number of sections and morphological differences that aid in the passage of exhaust gasses, lowering sound pressure at various frequencies. Rigid mufflers cause more backpressure, which is a disadvantage. Despite the fact that they efficiently reduce noise emissions and improve passenger comfort, these mufflers are preferred for passenger vehicles. As a result, the majority of passenger vehicles operated on public roads now come standard with reactive mufflers.

Absorptive muffler

This muffler reduces its output by absorbing sound energy through dissipative or absorptive mechanisms. The ability of the absorptive material to transform sound wave energy into heat reduces the intensity of sound waves. A conventional absorptive muffler's bigger steel casing encircles a round pipe with holes. A sound-absorbing layer is formed between the perforated conduit and the casing. This stratum weakens a component of the pressure waves.

Rock wool

In addition to its significant sound absorption capabilities, heat retention, stability, and lack of water absorption, rock wool insulation is extremely fire resistant. The substance is biocompatible with living beings and has a long lifespan as an insulator. Rockwool is non-carcinogenic, mutagenic, and poisonous, and it does not inhibit reproduction or deplete the ozone layer. The material in question may be recyclable. At temperatures above 1000 degrees Celsius, the substratum melts. The substance has properties that prevent it from igniting and is perishable. The sections can be knitted together at the joints to reduce the amount of holes and voids while still creating a snug fit. This is possible with products made of lightweight rock wool with slightly flexible edges. Long-term dimensional stability is an object's ability to remain steady, preserve its form, and function unchanged over a fifty-year period. Sound absorption can be considerably improved by using rock wool

ISSN: **3139-5503** | Volume-1 Issue-2 | May-June 2026 | **ADSJ-1206**
DOI: https://doi.org/10.5281/zenodo.22301461

barriers, roofs, and subfloors. The sound level may be decreased by up to 50 dB depending on its shape and construction.

2. LITERATURE REVIEW

Yasuda et al. developed an alternate approach for increasing muffler sound that utilizes the traditional construction process of adding an additional hole to the exhaust pipe (Yasuda et al., sequel). The proposed resonator's sound properties were explored experimentally and theoretically in the time and frequency domains. It was discovered that, similar to a Helmholtz Resonator, the connecting opening of the proposed muffler reduced noise. The muffler under consideration is capable of attenuating both intermediate and low frequency noise at the same time. The frequency equation for this construction was derived by comparing electricity and sound. It is advantageous to obtain an insight of the reduction's performance during the pre-design and refining phases. A study looked into the effect of the suggested muffler's structural qualities on its noise-blocking performance. Their research intends to demonstrate a simple and efficient noise reduction technology provided by Anant W. Wankhade and his colleagues. Acoustic analysis is used to determine the volume of the sound coming from the exhaust. As the goal of this project, Finite Element Analysis (FEA) will be used to improve the sound analysis of mufflers. The muffler was modeled in PRO E Wildfire 5.0, and the sound was investigated in COMSOL MULTIPHYSICS. The effects of rearranging the inlet and exit pipelines within the chamber, as well as incorporating a second intake tube (specifically, a divided inlet), on the sound pressure level (SPL) and transmission loss (TL) were investigated. These criteria were then changed to obtain the desired results of decreasing SPL or increasing TL. The potential impact of the sound pressure level (SPL) on the filter walls is not considered. Furthermore, the components that comprise the resonator are not taken into account. To validate the manufactured version of an upgraded elliptical muffler model, a manufacturing test is performed. Experimentation-based research follows. The study examines the fundamental concepts underpinning muffler design and outlines the key advantages of various muffler designs. When constructing a muffler for a certain application, it is critical to consider specific functional characteristics. According to the research study, these requirements apply to design components that are not related to soundproofing. The graph depicts the examination into the link between frequency and transmission loss for materials used in straight lines and sound absorption.

A suppressor is depicted in the illustration. An absorptive substance can achieve double transmission loss, represented by the letter A. Selamet et al. study the sound-dampening properties of a perforated concentric silencer comprising continuous strand fiber using both theoretical and experimental methodologies. Following that, an extra Helmholtz resonator and a hybrid exhaust with two filling chambers perforated in a single pass are integrated into the research.

3. MATERIALS AND METHODS

Problem Formulation

The exhaust system is a collection of

ISSN: **3139-5503** | Volume-1 Issue-2 | May-June 2026 | **ADSJ-1206**
DOI: https://doi.org/10.5281/zenodo.22301461

components that discharge the exhaust pollutants from an automobile. It completes a circuit around the vehicle, beginning at the engine manufacturer's specified exhaust plane. It also prevents the vapors from overheating and inflicting damage to nearby car structures. A variety of crucial aspects are considered when virtually developing the exhaust muffler. The precise calculations made on the exhaust volume, engine back pressure, system mass, gas species distribution, and gas temperature distribution are examples of this. In order to improve outcomes, a comparative investigation is being carried out between the proposed muffler design and the existing muffler found on the Maruti Suzuki WagonR, both of which have identical engine exhaust parameters. The muffler is currently setup, as seen in the image below.



Figure3-1The muffler system is available on the Maruti-Suzuki WagonR.

Muffler is a component of the responding class type under examination. Noise is decreased by leveraging a muffler's capacity to block sound frequencies. The function of the resonance chamber is to impart an equal and opposite frequency to sound waves emitted by the engine exhaust. The influence of the sound waves will be nullified due to their convergence. The image supplied illustrates the muffler's interior assembly.



Figure3-2 A detailed examination of the components and operation of a muffler currently on the market.

The device is made up of three basic resonant chambers: an input chamber, a middle chamber, and an output chamber. Exhaust gas from the engine enters the muffler via the input conduit, which is placed on the right side of the image. Throughout this process, the catalytic converter must be passed. When the gas hits the muffler wall, it returns to its original course. Certain comments made thus far contradict the expected ingress and exit of the gas into the echo chamber, as well as the intended movement of other gases within. The gases enter the central chamber through the baffle hole. The gas effluents from both the input chamber and the perforations in this configuration, where it converges with the gas from the holes. It is then released into the atmosphere via the exit tube.

ISSN: **3139-5503** | Volume-1 Issue-2 | May-June 2026 | **ADSJ-1206**
DOI: https://doi.org/10.5281/zenodo.22301461

Maruti-Suzuki WagonR engine data:
Bore diameter (D) = 69 mm,
Stroke Length (L) = 72 mm,
No. of Cylinders (n) = 3,
Engine Power (P) = 67.04 bhp @ 6200 rpm
Swept Volume = 0.998 litre

Maruti-Suzuki WagonR Muffler data:
Length (l) = 350 mm,
Width (w) = 235 mm,
Height (h) = 135 mm,
Inlet pipe diameter (OD) = 40 mm,
Inlet pipe diameter (ID) = 38 mm,
Outlet pipe diameter (OD) = 35 mm,
Outlet pipe diameter (ID) = 33 mm,
No. of perforated holes = 45
Perforated holes Diameter (d) = 8 mm

Velocity calculation
From the engine specification we can calculate volume flow rate and from that we can calculate velocity of exhaust gas at the outlet of engine.
For 1 litre four stroke WagonR engine,
Volume Flow Rate(VFR),
Q= {engine capacity(cc) / 2} * N (rpm)
Where,
Q = Volume Flow Rate (cubic meter / sec)
N = Engine speed (RPS)
Now,
Q = AV
Where,
A = Cross sectional area,
V = velocity, m/s

In compliance with the student version of Creo Parametric, a model is built using the supplied muffler data and ANSYS simulation software. The muffler is currently displayed in the image in a disguised cross-sectional view.

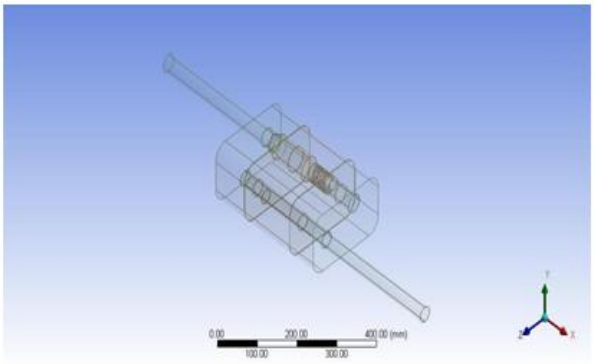

Figure3- A three-dimensional representation of the mufflers in their current arrangement

Design1

The muffler's design is intended to preserve the same volume as its predecessor. The internal design of the muffler allows the engine's gaseous exhaust to be separated into two independent pipes. As a result, the gas has increased mobility. Because perforations have been inserted into the core section of the pipe, high-frequency waves may escape. The designs in question are of two types. To change the diameter of the tail pipe, answer the following question. The pattern is apparent from within, as illustrated in the provided image.

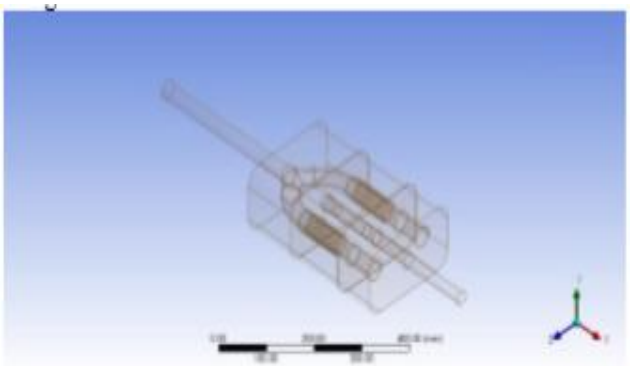

Figure 3- 4 This study includes a thorough three-dimensional analysis of Design 1.

Design 2

The design of the muffler makes it easier to eliminate exhaust pollutants. A plate-shaped device splits the flow when gas arrives from opposite directions on both sides. This partially negates the effect of each side. The image shown depicts an inside view.

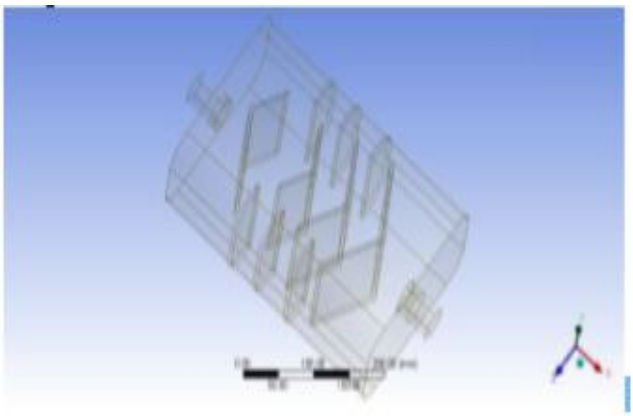

Figure 3-5 This research provides a three-dimensional assessment of Design 2.

Design 3

The object under consideration is a simple muffler with an oval arrangement of

ISSN: **3139-5503** | Volume-1 Issue-2 | May-June 2026 | **ADSJ-1206**
DOI: https://doi.org/10.5281/zenodo.22301461

openings. One conduit brings air into the space, while the other exhausts it. The exterior of the exhaust chamber is adorned with a convergent-divergent intake pipe with perforations. The objective behind the muffler's design is to determine the amount of air loss produced by its simple structure. The interior perspective is depicted in the figure below.

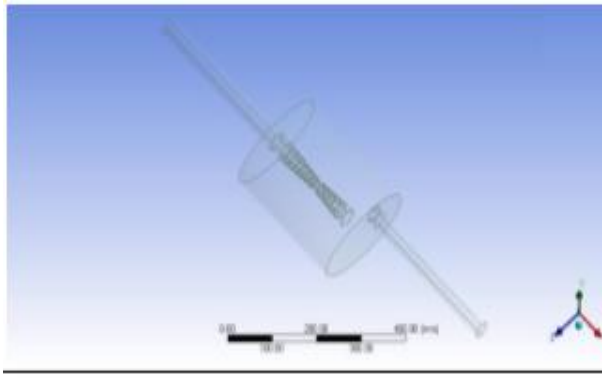

Figure 3- 6 This study includes a thorough three-dimensional analysis of Design 3.

Design 4

This elliptical shape is made up of three echo chambers. Gaseous compounds escape the body more efficiently through three separate paths. Furthermore, the central conduit is perforated to allow some waves of a specific frequency through while blocking others. By adding soundproof material into the middle area, hybrid mufflers can be made. Figure 3-7 depicts the internal muffler construction.

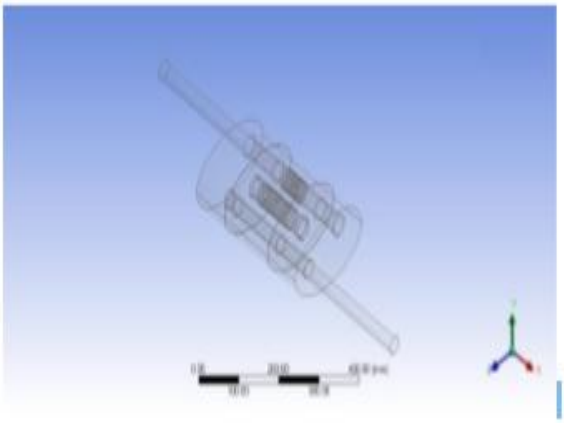

Figure 3- 7 This study investigates Design 4 from a three-dimensional standpoint.

Design 5

Following the muffler is the resonator, which is an important part of the exhaust system. Its principal role is to reduce disruption. A resonator's principal function is to reduce sound levels even further. The structure's basic design facilitates gas movement. The pattern's shape is depicted in the figure.

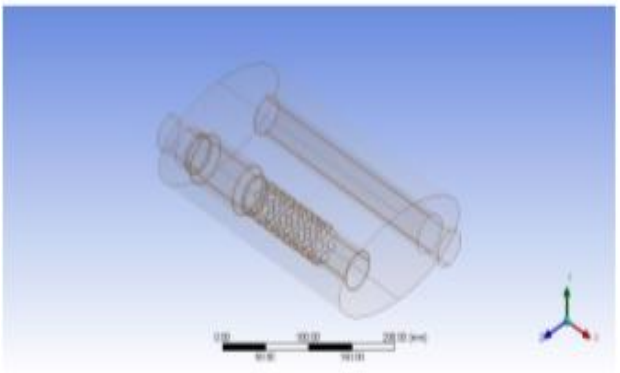

Figure 3- 8 This study investigates Design 5 in great detail from a three-dimensional standpoint.

Design 6

It is feasible to investigate the effects of sound and pressure by attaching mufflers and a resonator to a conduit, as shown in Figure 4-14.

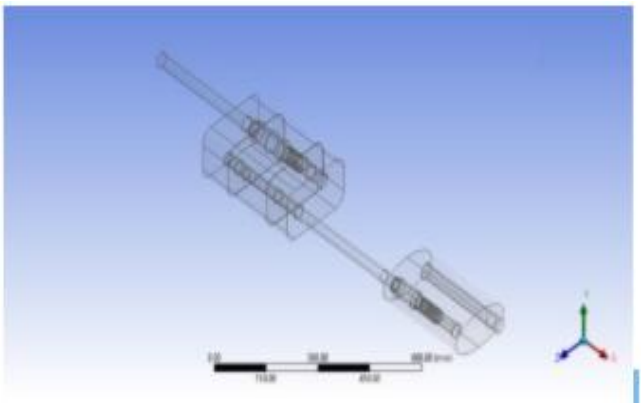

Figure 3- 9 The goal of this inquiry is to conduct a thorough three-dimensional analysis of Design 6.

The engine optimizes its output to 64.07 brake horsepower (bhp) at 6200 revolutions per minute (rpm), signifying its maximum power output. The velocity was calculated to be 39.7899 meters per

CC BY NC

ISSN: **3139-5503** | Volume-1 Issue-2 | May-June 2026 | **ADSJ-1206**
DOI: https://doi.org/10.5281/zenodo.22301461

second (m/s) at 6000 revolutions per minute (rpm). The inquiry also looked into the input and outflow border scenarios shown in the table.

Table3- Boundary conditions are a temporary framework that includes regulations or constraints

Inlet Condition	
Inlet velocity	39.7899 m/s
Inlet temperature	773 K
Density(constant at temperature)	1.225 kg/
Outlet Condition	
Opening at outlet	0.05 Pa
Outlet temperature	300 K
Energy	On

The student edition of ANSYS CFX Computational Fluid Dynamics was used for bounded condition analysis. Every muffler analysis employs the aforementioned boundary criteria.

4. RESULTS

ANSYS CFX was used to study a number of muffler models, and experimental data was collected in addition to the modeling results to verify their accuracy. The various mufflers' limits were modeled at a velocity of 39.7899 m/s, or 6200 rpm, which corresponds to the engine's maximum output.

Simulation Results Existing Design

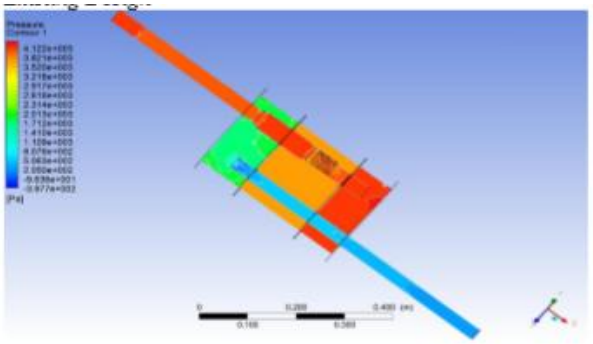

Figure 4- 1 A pressure contour is formed by the current.

The pressure contour graphic depicts the greatest pressure in the muffler's entrance chamber. As one moves through the chambers, the pressure gradually decreases.

Design 1

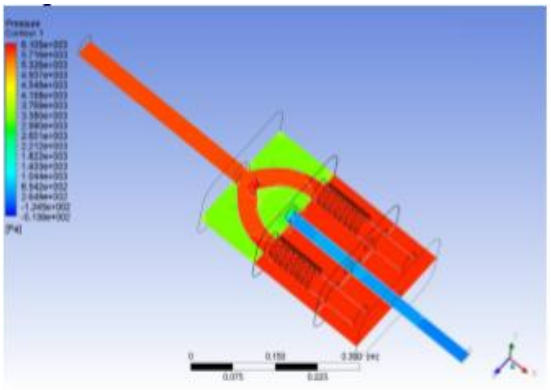

Figure 4- 2 Design 1's pressure curve is being studied.

As illustrated above, when the output pipe breadth is 30 mm, design 1 outperforms the current design in terms of pressure loss performance. The much greater velocity at the exit adds to the 6105 Pa pressure loss measured for this design.

Design 2

The muffler design, also known as design 2, is easily identified because it comprises mostly of plates positioned at various angles. This arrangement handles exhaust gas flow well while minimizing pressure loss. Because of the reduced blockages, the fluid has improved fluid-to-plate kinetics. The existing design is more effective at preserving internal pressure than this design.

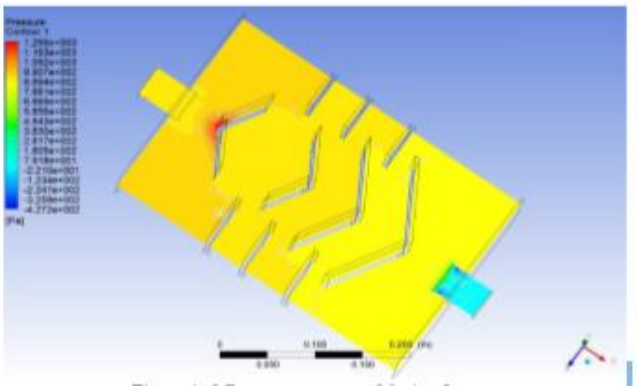

Figure 4- 3 Design 2's pressure curve is being studied.

Design 3

ISSN: **3139-5503** | Volume-1 Issue-2 | May-June 2026 | **ADSJ-1206**
DOI: https://doi.org/10.5281/zenodo.22301461

The muffler is simple in design, with a single input and exit pipe with its own axes. Because of its convergent-divergent structure, gas flows smoothly via the open input conduit. Furthermore, in Design 2, the pressure reduction is decreased.

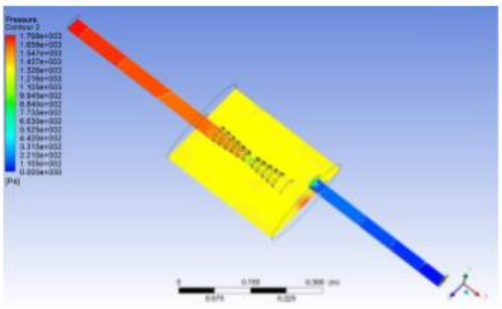

Figure 4- 4 Design 3's pressure curve is being studied.

Design 4

The pressure of the gas lowers dramatically when it pipes down to another chamber. The pressure is at its highest at the pipe's entrance. This new edition of the gas transmission system is more efficient than its predecessor. The amount of pressure loss is around 2050 Pa.

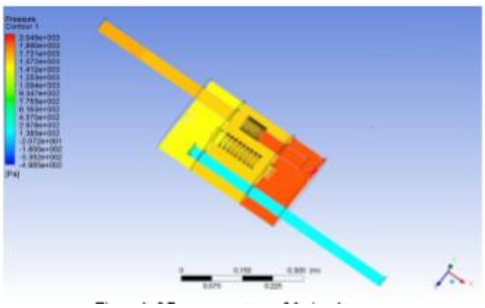

Figure 4- 5 The pressure shape of design 4 is depicted in the image below.

Design 5

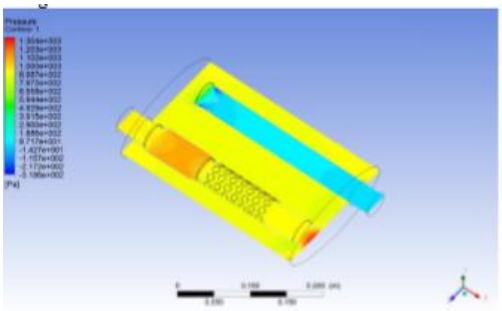

Figure 4- 6 The pressure curve associated with Design 5 is depicted in Figure 5.

The resonator is a series component that follows the exhaust to block out noise. Because of the process's simplicity, less pressure loss occurs.

Design 6

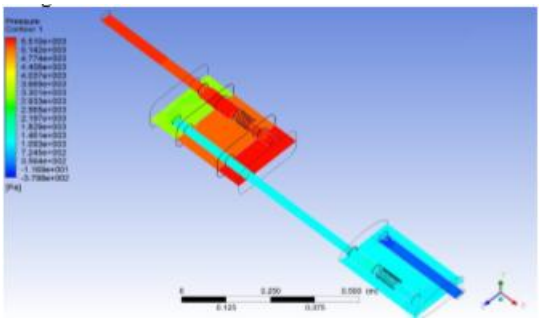

Figure 4- 7 In Design 6, the pressure curve is depicted.

As shown in Figure 4-7, a muffler and a resonator are linked in a chain. Air loss increases in the presence of a resonator, as shown in the image. Nonetheless, this causes a rise in the back pressure measurement. That necessitates such minor changes.

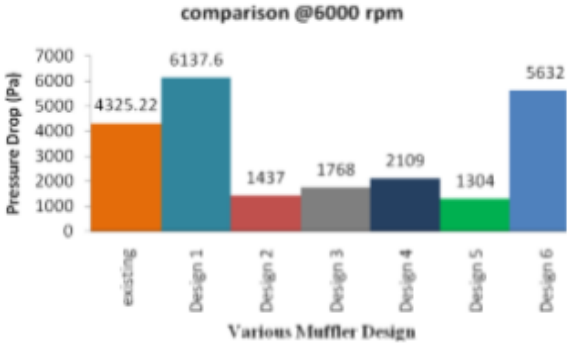

Figure 4- 8 The goal of this work is to create an alternate design that could be used in place of the current one.

The performance of the mufflers at 6000 rpm is shown in the bottom section of Figure 4-8. The results show that Design 1 has the biggest pressure reduction (6137.6 Pa) when compared to the other designs. This is because of its thinner tailpipe. Internal pressure is reduced by 5,632 units as a result of connecting a resonator to the output of the dual muffler. This resonator increased pressure loss, resulting in a

ISSN: **3139-5503** | Volume-1 Issue-2 | May-June 2026 | **ADSJ-1206**
DOI: https://doi.org/10.5281/zenodo.22301461

reduction in noise. In any event, a rise in back pressure causes an increase in air loss, which interrupts engine operation. Pressure drop can be decreased by enhancing the performance of a gas flow channel using different designs. Their noise reduction skills, however, are significantly weaker.

5. CONCLUSION

After several prototypes were compared to the muffler that came standard with the Maruti-Suzuki WagonR, digital reproductions of these sketches were created. Design 1 is more effective at minimizing pressure loss, as evidenced by the modeling results. As pressure loss rises, noise levels will decrease even further. Design 6 is a hybrid device made up of a muffler and a resonator. This is known as a dual muffler. The current design results in less pressure loss than the suggested design. Because of their higher sound absorption qualities, styles 1 and 6 may be chosen. Back pressure builds up, impairing engine performance and making it impossible to discriminate between benefit and disadvantage.

REFERENCES

1. Yasuda T., Wu C., Nakagawa N., Nagamura K., Studies on anAutomobile Muffler With The Acoustic Characteristics of Low-passFilter and Helmholtz resonator, Applied Acoustics, 74: (2013) 49-57
2. Wankhade A. W., Bhattu A. P., Optimization and ExperimentalValidation of Elliptical Reactive Muffler with Central Inlet CentralOutlet, International Journal of Engineering Research & Technology,
3. Potente, Daniel, General Design Principles For an AutomotiveMuffler,ACOUSTICS2005 ,9-11November2005,Busselton, Australia
4. Selamet A., Lee I.J., Huff N.T., Acoustic Attenuation of HybridSilencers, Journal of Sound and Vibration 262; (2003): 509-527 Yasuda T, Wu C., Nakagawa N., Nagamura K Bazhenov D.V.,Bazhenova L.A. et al., Noise Silencer in the Form of HelmholtzResonator at the Outlet of an Air Duct of Finite Length, AcousticalPhysics, Vol. 46; No. 3; 2000: pp. 256-260
5. http://www.rockwool.in/why+rockwool -c7- /performance+and+properties

CC BY NC